DATASHEET – DIMESIONS

14248

BRAKE CYLINDER WITH DOUBLE EXTERNAL SPRING

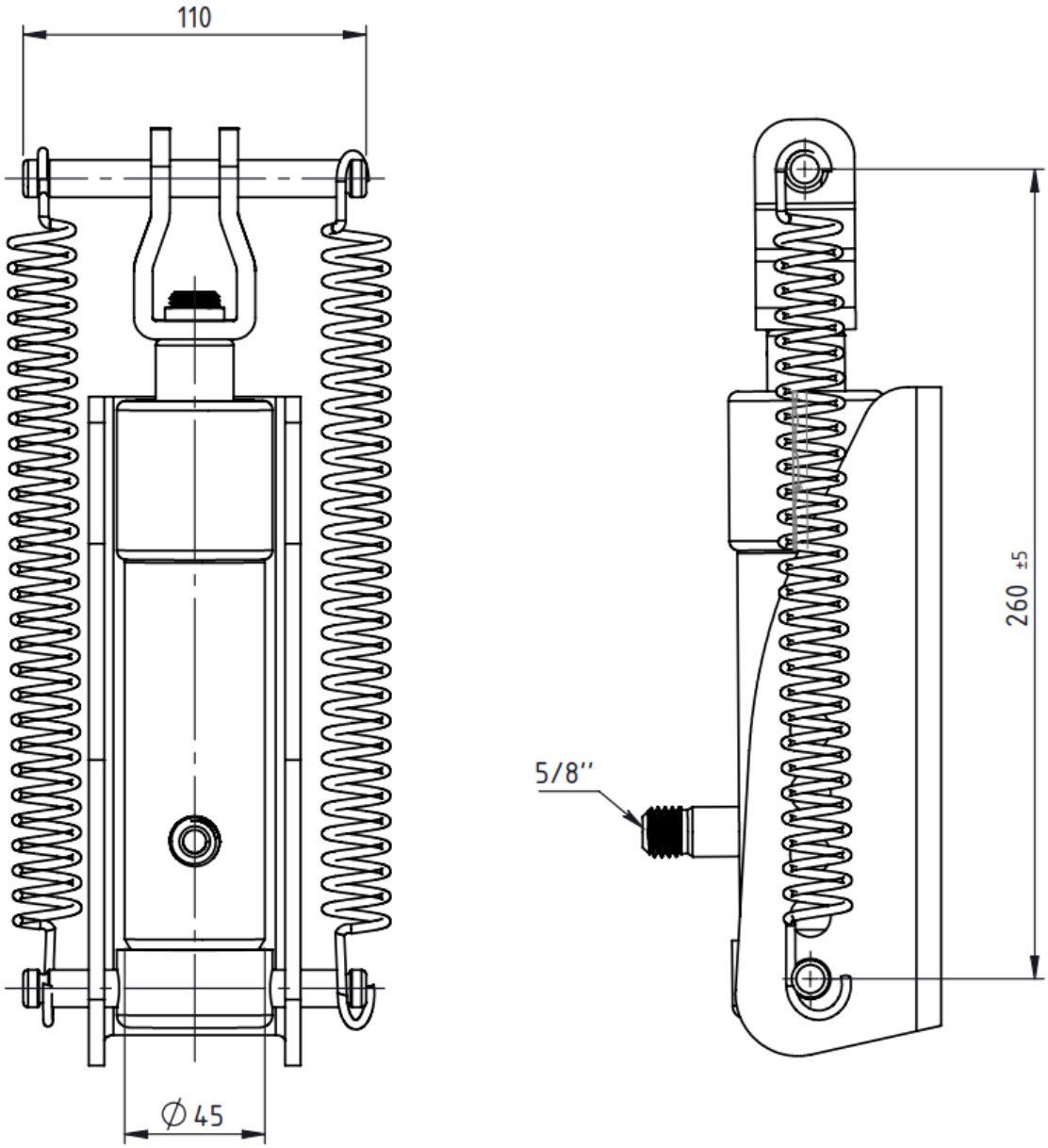

Technical information	
Connection size:	5/8"
Weight:	4 kg
Stroke of the cylinder:	140 mm
Length (min. → max.):	260 → 400 mm

